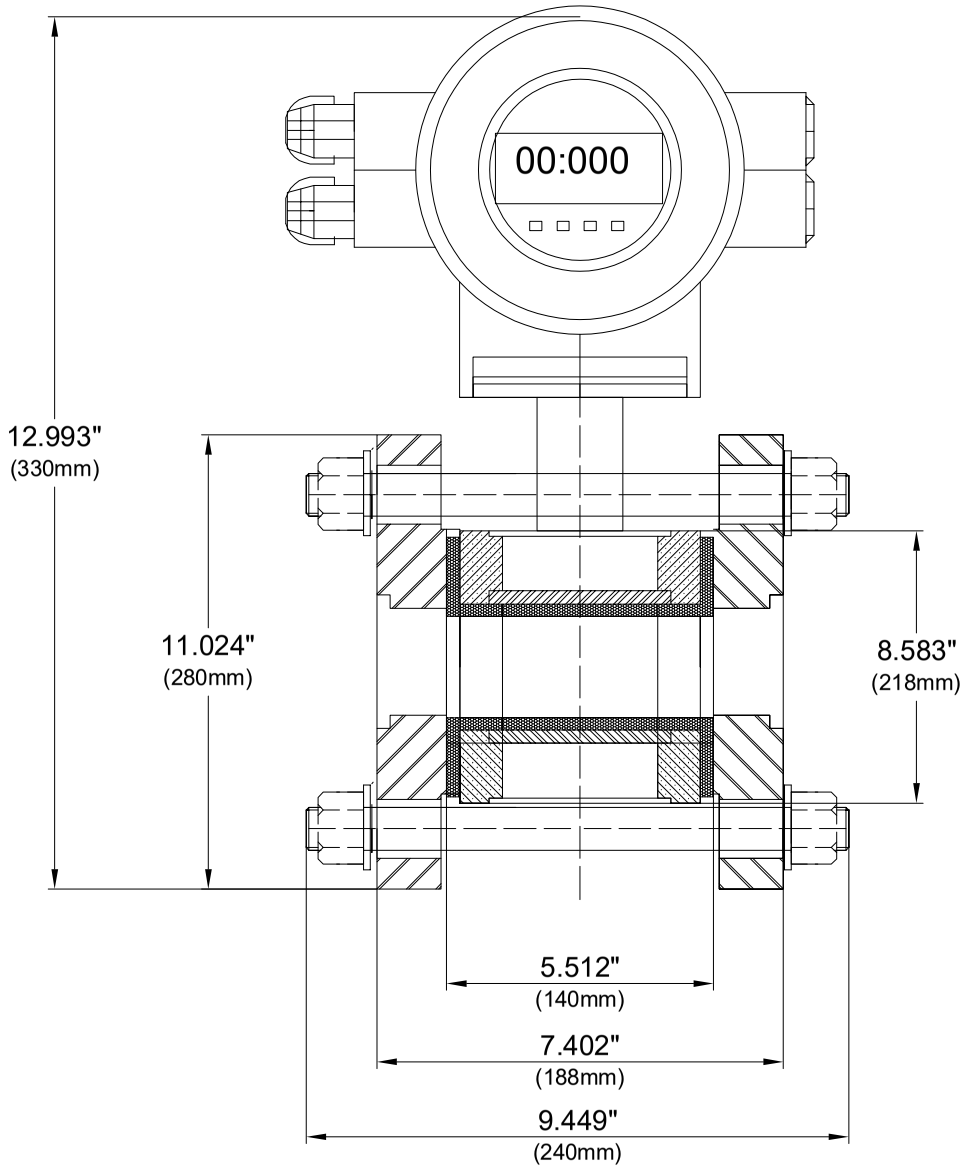

MODEL NO-TEK-FLUX 1400A	
Size	6"
Pressure	CL 150
Flowmeter Std.	JB/T9248-2015
Flange Std.	ANSI B16.5

CUSTOMER :

CUSTOMER DWG NO :

P.O.NO : S.O.NO :

PROJECT NAME :

Drawing is not Certified,Certified drawing are available on request.
Dimensions are nominal and may be vary slightly the actual product.

ALL DIMENSIONS ARE IN INCH(mm) | TOTAL QTY :- -

ANGLE: | SCALE: N.T.S | SIZE: A1 | REV: 00

Tek-Trol LLC

TITLE: TEK-FLUX 1400A ELECTROMAGNETIC FLOW METER

DR.: JST | 07 JAN 2018 | DRAWING NO.:

APP'D: KNU | 07 JAN 2018 | 1400A-GA-01

PRODUCT CODE:1400 | SHEET:1 OF 1